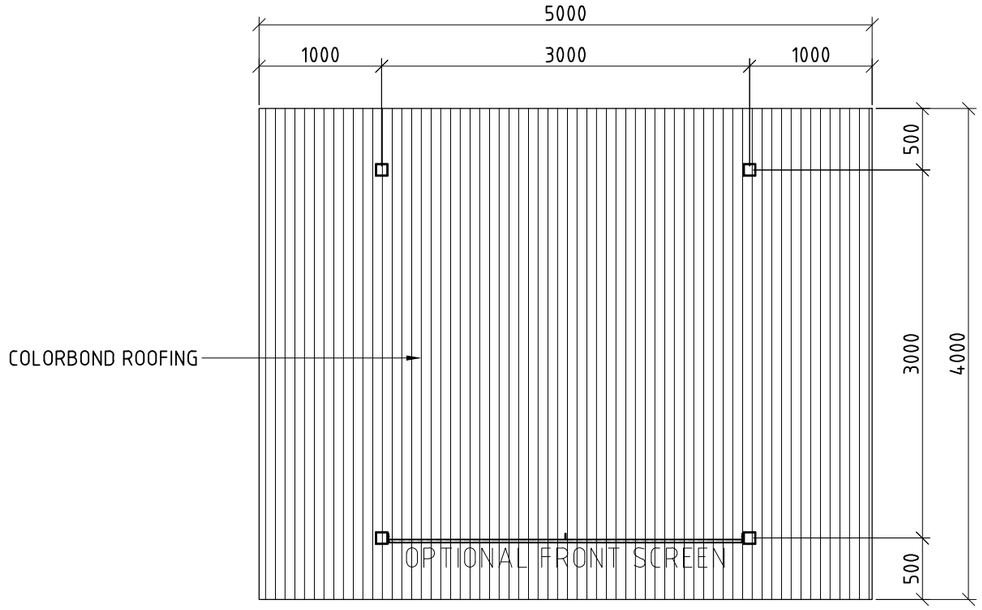

PLAN

SCALE (1:50)

GENERAL NOTES:

1. DURING CONSTRUCTION THE STRUCTURE SHALL BE MAINTAINED IN A STABLE CONDITION AND NO PART SHALL BE OVER STRESSED.
2. PRIOR TO COMMENCEMENT OF WORKS THE BUILDER SHALL SATISFY THEMSELVES OF THE CORRECT LOCATIONS OF ALL EXISTING SERVICES WHETHER INDICATED OR NOT ON THE PLANS.
3. LOCATING OF THE STRUCTURE, INCLUDING CO-ORDINATES IF APPLICABLE, IS THE RESPONSIBILITY OF THE CLIENT AND/OR THE CLIENT'S SITE REPRESENTATIVE.
4. STRUCTURE HAS BEEN DESIGNED AS A CLASS 10A STRUCTURE AND IN ACCORDANCE TO THE FOLLOWING AUSTRALIAN STANDARDS:
   - **AS1170.1, AS1170.2, AS1720.1, AS3600 AND AS4100, AS1664.**
5. STRUCTURE IS SUITABLE FOR **N3** AREAS AND HAS BEEN DESIGNED WITH AN ANNUAL RECURRANCE INTERVAL OF 100 YEARS.
6. SITE COVERAGE IS **20** m^2 (ROOF AREA).
7. THE FOOTING HAS BEEN DESIGNED ASSUMING:
   - SITE CLASS S OR M OR H
   - ALLOWABLE SOIL BEARING CAPACITY OF 100kPa
   - SOIL ADHESION OF 10kPa

   (TO BE VERIFIED ON SITE).
8. FOR SLABS ON GROUND, ALL TOPSOIL AND UPPER STRATA CONTAINING SOFT OR ORGANIC MATTER ARE TO BE REMOVED AND REPLACED WITH SELECT COMPACTED FILL.
9. ALL FILL TO BE CLEAN, PLACED IN LAYERS NOT EXCEEDING 200mm AND COMPACTED TO 95% STANDARD COMPACTION.
10. EARTHWORKS SHALL BE CARRIED OUT IN ACCORDANCE WITH CRITERIA AND PROCEDURES SET OUT IN AS3798 *GUIDELINES ON EARTHWORKS FOR COMMERCIAL AND RESIDENTIAL DEVELOPMENTS.*

PRELIMINARY DRAWING ONLY - NOT FOR CONSTRUCTION

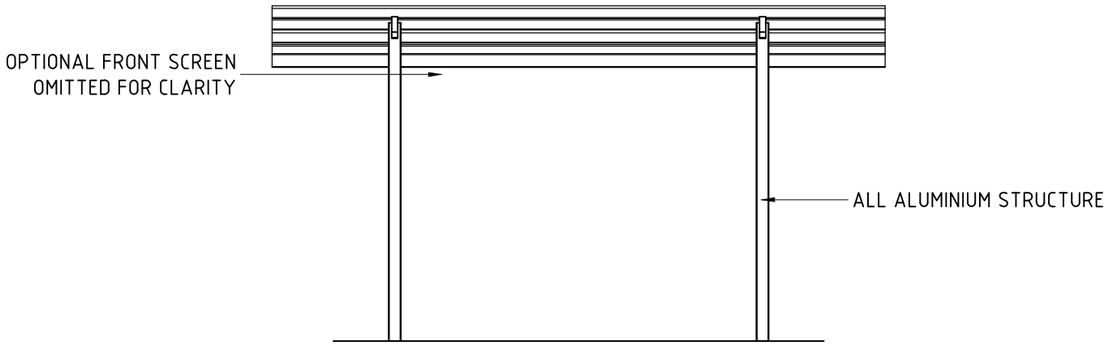

FRONT ELEVATION

SCALE (1:50)

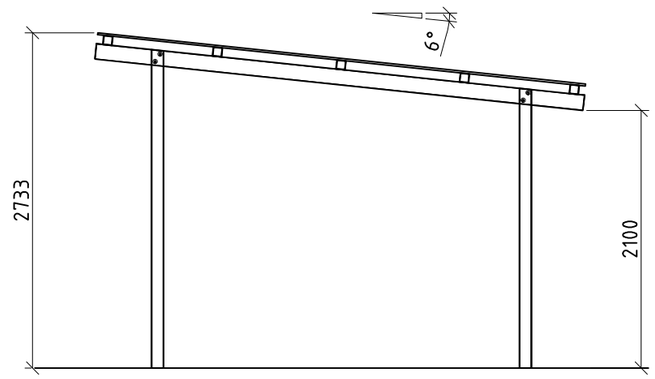

REVISION		DRAWN	DATE
5			
4			
3			
2			
1			

THIRD ANGLE PROJECTION U.N.O.

mm — ALL DIMENSIONS IN MILLIMETRES U.N.O. DO NOT SCALE FROM DRAWINGS IF IN DOUBT, ASK

© LANDMARK PRODUCTS LIMITED

THIS DOCUMENT REMAINS THE PROPERTY OF LANDMARK PRODUCTS LIMITED. UNAUTHORISED USE OF THIS DOCUMENT IN ANY FORM IS PROHIBITED.

NCS INTERNATIONAL CERTIFIED SAFETY MANAGEMENT SYSTEM AS/NZS 4801

NCS INTERNATIONAL CERTIFIED QUALITY MANAGEMENT SYSTEM ISO 9001

Landmark
Enhancing Open Space Environments

Landmark Products Limited. PH: 1300 768 230
A.B.N. 99 112 000 843 FAX: 1300 768 260
55-57 Kabi Circuit, Deception Bay
P.O. Box 603, Deception Bay www.landmarkpro.com.au
Queensland 4508 landmark@landmarkpro.com.au

DRAWN	MAF
CHECKED	-
DATE	-
SCALE	NOTED
PAGE	A3

CLIENT NAME: **LANDMARK PRODUCTS LIMITED**

PROJECT: **STANDARD K690 "BRIGHTON" SHELTER RANGE**
K695 BRIGHTON,AP, IG, S/S FIXINGS

DRAWING TITLE	DRAWING NUMBER	SHEET	REVISION
PRELIM - PLAN & ELEVATIONS	K6954A*A*IM*	001	0