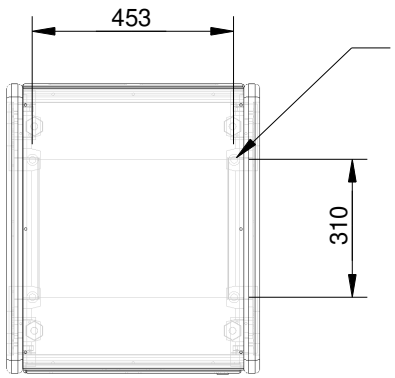

BOLT DOWN DETAIL
4 OFF ∅15 THRU
WITH ∅25x18
COUNTERBORE

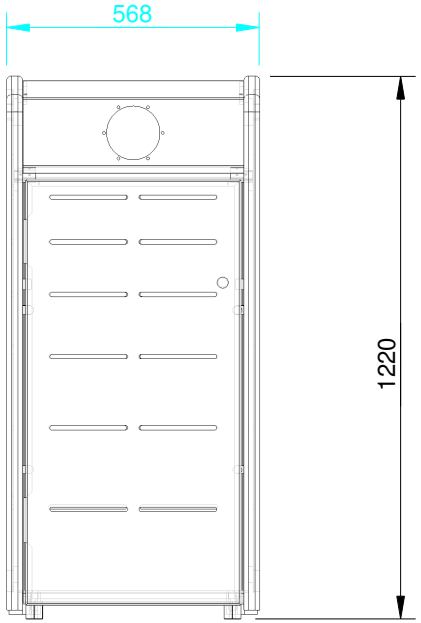

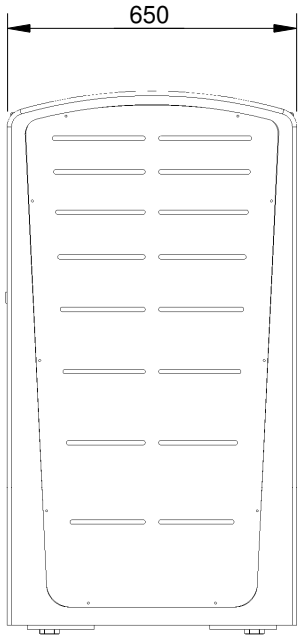

SPECIFICATION:

MATERIALS:
Main construction - Recycled cast aluminium
Panels - 304 Stainless steel

DIMENSIONS:
mm unless otherwise stated

FINISH:
No.4 Polished S/S panels
Mill finish, powdercoat or 2 pack paint castings

GROUND ATTACHMENTS:
Bolt down with adjustable brass feet

ENTRY:
Side entry

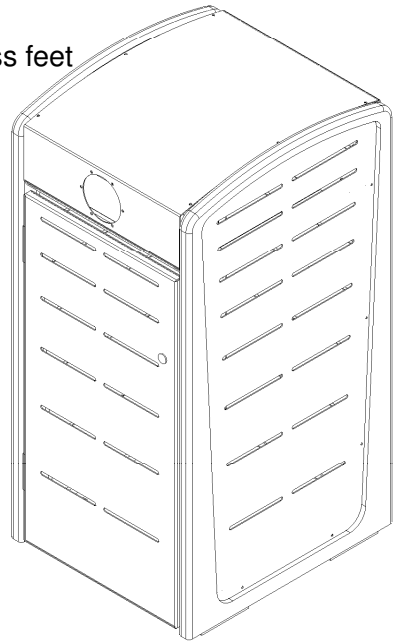

Certified System
Quality
ISO 9001
SAI GLOBAL

© copyright
CONFIDENTIAL

REVISION #	DESCRIPTION	BY	DATE	DRAWN	DRAWN DATE	CHECKED	CHECKED DATE	SCALE	A4
1	ORIGINAL DRAWING	RBC	10.12.13	R.CRIGHTON	10.12.13			N/A	
2									
3									
4									
5									

FURPHY FOUNDRY EST. 1864

METRO RECYCLE UNIT 120L
SPEC.

FFSA013002 | REV. 1 | SHEET 1 OF 4