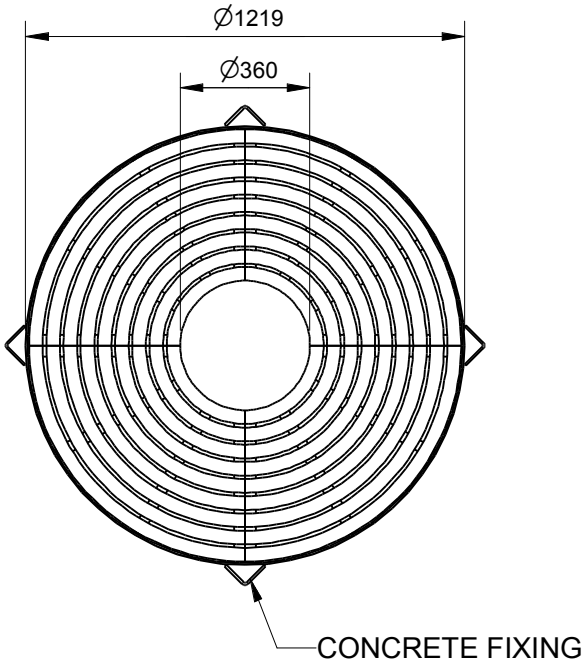

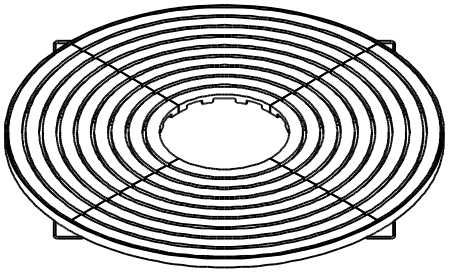

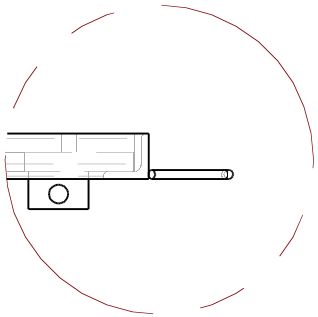

Detail A
LUG PLACEMENT
HIDDEN LINES SHOWN

SPECIFICATION:

MATERIALS:
Grate - Recycled Aluminum
Frame - Mild Steel

DIMENSIONS:
All in mm unless otherwise stated

FINISH:
Frame - Galvanised & Optional Powder Coat
Grate - Mill or Optional Powder Coat

Certified System™
Quality
ISO 9001
SAI GLOBAL

© copyright
CONFIDENTIAL

REVISION #	DESCRIPTION	BY	DATE	DRAWN	DRAWN DATE	CHECKED	CHECKED DATE	SCALE	A4
1	ORIGINAL DRAWING			R.CRIGHTON	26.3.14			N/A	
2									
3									
4									
5									

FURPHY FOUNDRY EST. 1864

1219 CIRCULAR TREE GRATE SPEC.

FFSA006007 | REV. 1 | SHEET 1 OF 2